KINGDOM OF CAMBODIA

Nation, Religion, King

ELECTRICITE DU CAMBODGE

TECHNICAL RULE

EDC-TR-004

ELECTRICAL TESTS FOR 22KV and 35 kV XLPE UNDERGROUND CABLE

(Commissioning and diagnosis)

June 2021

ELECTRICITE DU CAMBODGE

Version	Date	Technical Specification Name	Authorized by : (name and signature)
1.0	January, 2022	Electrical test for 22 kV and 35 kV XLPE Underground Cable	**Dr. Praing Chulasa**

Version	Drafted/reviewed by	Verified by	Approved by	Date
Draft1	AD			04/2021
Draft 2	AD			05/2021
Draft 3	AD/EDC			05/2021
FINAL	AD/EDC			06/2021

Content

[blank]

1 Preamble

This technical rule gathers cable testing recommendations from IEC 60502-2 and IEEE 400.2 standards as well as specific utilities documents from AUS grid, ENEDIS, HORIZON POWER, ERGON ENERGY, ESSENTIAL ENERGY, WESTERN POWER, etc. and cable manufacturers as PRISMIAN and NEXANS, etc...

Most of insulation values are standard one's that may vary according temperature, cable quality and PVC or XLPE compound.

In case of cable diagnosis, the voltage tests level had been lowered in order to take into account the numerous fault researches that could have aged and reduced the lifespan of all underground cables. Nevertheless this voltage reduction will allow the assessment of the cable diagnosis.

2 Scope of Application

This document defines the electrical tests to be carried out on **newly installed 22 kV and 35 kV underground cables with XLPE insulation** and PVC outer sheath for commissioning and acceptance of the cable.

It defined also **the existing cables diagnosis to be carried out on existing strategic cables** in order to assess their ageing and the necessity of cable renewal.

The tests and testing sequence described applies only for XLPE insulated cables.

MV XLPE cables, including cable joints, terminations and separable connectors (plugins), must be tested following installation, to confirm that the insulation levels and integrity of the cable system are within acceptable values.

Most failures of XLPE cable are related to moisture ingress into joints or terminations or incorrectly installed accessories (poor workmanship and/or inadequate materials).

The aim of testing of 22kV and 35 kV cables is to expose, in controlled conditions, any faults that will result in premature failure of the cable and associated terminations.

XLPE insulated cables must not be tested with a HV DC cable tester (high potential (DC hipot)), as it may cause damage to the cable and reduce its lifespan.

Where new cables are jointed to existing cables the voltage test requirements are modified as described in this document in order to take into account the aged insulation of existing cables

3 Safety

Necessary safety procedures are not mentioned and taken into consideration in this document.

It is of the testing staff and network operation staff own responsibility to apply those safety procedure on site for their own as well as for the safety of other persons.

Position "HV Test in Progress" signs at all ends of the MV cable prior to testing.

Where public access is possible, position Safety Observer and barricade exposed ends of cable during insulation test.

4 Testing staff

The staff must perfectly know the testing equipment, apparatuses and testing procedures.

5 Testing equipment

The testing equipment is constituted of:

- 5KV insulation resistance tester (2.5 kV or 1 kV insulation tester could be used),
- TDR reflectomer with impedance curve recording possibility,
- 45 kV Very low frequency (VLF) 0.01/1 Hz equipment (Sine/rectangular) for 22 kV (24 kV) cables.
- 60 kV Very low frequency (VLF) 0.01/1 Hz equipment (Sine/rectangular) for 35 kV (38 kV) cables.
- Tan δ and partial discharge options for the VLF equipment above mentioned (cable diagnosis only)

The equipment and all accessories (ie: connecting leads, etc...) must be in perfect status and being yearly checked by the manufacturer.

Similar functions that are incorporated in UGC fault research vans can be used. Some vans includes cable outer sheath specific apparatus. This one will be used because it allow testing and also location of eventual damage to the cable outer sheath.

In all cases, the testing team shall be trained by the equipment manufacturer for carrying out such testing on new cable (as well as for fault location).

Additionally to this testing equipment, some necessary tools must be added in order to carry out the cable testing in full safety, electrical and technical conditions. They are as follow:

- Insulation Cap for interface C and A separable connectors (24kV) for eventual use on RMU separable connector disconnected. (3 pcs)

- Testing rod for interface C separable T connectors (24 kV) for connexion of testing leads keeping the separable connector connected to the RMU (3 pcs)

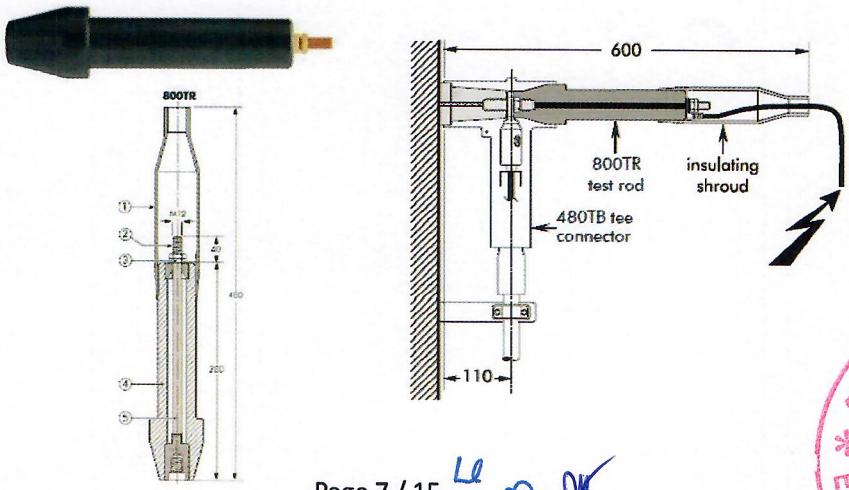

Depending the type of interface C connectors other type of testing rods are available on the world market.

Additionally, specific bushings (24 kV) for interface between separable connectors of interface A or C and air may be used provided they are installed on a specific support and taking care of safety rules.

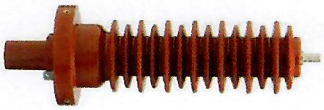

6 Testing for new cable commissioning

The tests are carried out **on fully installed and equipped underground cables**. This means that all accessories must be properly installed on the cable as junctions, separable connectors (plug in), and terminations. So that cable accessories are also tested.

It is strictly forbidden to dismantle any accessory mainly separable connectors for cable testing.

6.1 Main basic rules

The main basic rules above must be respected:

- Separable connectors are connected to RMU during tests. In case of impossibility they must be fitted with insulating caps.
- Any eventual separable connector surge arresters must be disconnected or removed
- Outdoor terminations (pole mounted) are disconnected from the overhead line as well as from surge arresters (jumps removed)
- Indoor terminations remain connected to their pad if possible
- In all cases, the cable characteristics (cable type, manufacturer, cross section, etc....) mentioned on the cable outer sheath are verified and recorded.

6.2 Testing order

The testing order is as followed:

1. Outer sheath test integrity
2. Insulation resistance
3. Recording of impedance curve (Reflectometer)
4. VLF test

6.2.1 Outer sheath test integrity

A sheath integrity test at a voltage of 5000V DC (maximum value applied by most of utilities) applied for 1 minute is carried out with an insulation resistance tester, between the outermost metallic layer and earth. This will identify if there has been any damage to the sheath during/after installation. It is to be noticed that using a specific outer sheath testing equipment is more convenient because this tester is specifically design for such task and for most of them, allow location of damaged outer sheath (in case of).

The screen shall be isolated from earth at both ends of the cable to be tested.

- The 5KV insulation resistance tester **is connected between screen earthing braids and earth.**

- Depending of the cable length, it could be necessary to wait more than 1 minute in order to get a stable reading of the testing equipment. In any cases, this test shall not exceed 10 minutes.
- In case of three separated core cables (3x1xcross section) the testing is carried on each unipolar cable.
- **Reconnect the screens to the earth after outer sheath integrity test for at least 5 minutes before handling or performing other tests.**
- Record the values
- Turn off the testing equipment, short circuit and earth the cable and then disconnect the equipment.

Results: If no flash over occurs and if the outer sheath resistance test is:

Outer sheath	New cable	10 years old cable
PVC	≥ 1000 MΩ (*)	≥ 100 MΩ (*)

(*): Values from Western power, Ergon, Enedis, etc..

The test is considered as passed.

It is to be noted that the resistance value varies according cable temperature.

Note: *In case a new cable is connected to an existing cable it is strongly recommended to test separately the two cables before installing the junction between them.*

Given values are standard values so it is always fruitful to get outer sheath data (resistance/km) from manufacturers.

6.2.2 Insulation resistance test

An insulation resistance test at a voltage of 5000V DC applied for 1 minute is carried out with an insulation resistance tester, between core and the corresponding metallic screen.

- In case of separable connectors (plugins), the caps and capacitive dividers of separable connectors are removed and the testing rods are installed instead.
- The 5KV insulation resistance tester **is connected between the testing rod (or the lug of termination) and the corresponding screen earthing braids**
- Depending of the cable length, it could be necessary to wait more than 1 minute in order to get a stable reading of the testing equipment. In any cases, this test shall not exceed 10 minutes.
- The test is carried out on each core one after one
- Record the values
- Turn off the testing equipment, short circuit and earth the cable and then disconnect the equipment.

Results: the test is considered as passed if no flash over occurs and if measured values are:

Insulation	New cable	Aged cable
XLPE	≥ 10 000 MΩ (1)	≥ 1000 MΩ (2)

(1) Western Power, Enedis (2) Ergon, Enedis, etc...

The above values are given for a maximum cable length of 1000 m.

It is to be noted that the resistance value varies according cable temperature and cable length.

The difference in insulation resistance values between phases shall not exceed by 30% unless resistance values are greater than 10 000 MΩ. (Western Power)

Depending on the length, age, type of termination or weather conditions, considerable lower insulation resistance values are possible.

In some cases, lower insulation resistance values are acceptable provided that the cable under test can withstand the recommended test voltage.

Note: *In case a new cable is connected to an existing cable it is strongly recommended to test separately the two cables before installing the junction between them.*

Given values are standard values so it is always fruitful to get insulation data (resistance/ km) from manufacturer.

6.2.3 Recording of cable impedance curve (Reflectometer)

It is always interesting to know and record the underground cable characteristics using a reflectomer. In fact, if in the future, the said cable get a trouble, it is possible to easily pre-locate the eventual fault by comparing the two curves: at cable commissioning and at faulty cable period.

The equipment used is a time domain reflectometer (TDR), which is extensively used for pre-locating a fault. It is recommended to connect directly the reflectomer to the cable and not through HV testing equipment. If the reflectometer is fitted with Arc Reflection Method (ARM), this one will not be used.

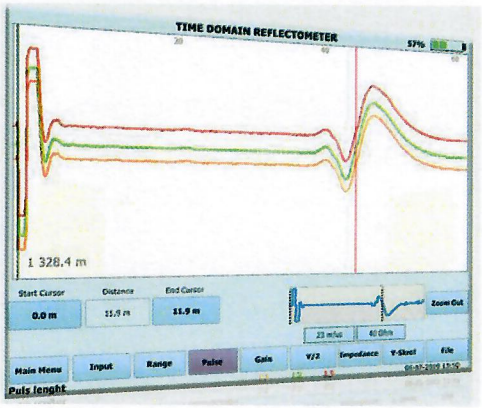

The testing equipment is connected according the manufacturer instruction notice.

- The testing leads are connected to **the testing rods already installed on the separable connectors testing rods (or the lugs of the termination) and the corresponding screen earthing braid.**
- The testing is done on the three cores and then compared. Depending the testing apparatus this can be done on each phase one after one or on the three phase in the same time.
- Record the curves in the system and then in a flash disk in order to save the files in a data base for latter comparison.
- Turn off and disconnect the equipment.

Checking: This test, that is not damageable for the cable, **is done only for comparison latter if properly recorded and stored in a data base**. Nevertheless, the three curves (one for each phase) must be compared; the three must be similar. In case one is different from the two others this would means that:

- One junction is installed on that phase
- The core had been damaged.

6.2.4 VLF test

In all cases

This very low frequency (VLF) test is not damageable for the cable if all testing conditions are respected. Nevertheless it must be not repeated often.

- The VLF equipment is connected **to the testing rods of the separable connector (or to the lug of terminations) and to the corresponding screen earthing braid.**

All screens must be connected to the earth.

- VLF voltage (3Uo) is injected in each core for a minimum duration of 15 minutes (IEC 60502-2).
- Short circuit and earth the cable and disconnect the VLF equipment, remove the testing rods and insulating cap (if any installed).
- Reinstall capacitive dividers and caps on the separable connectors.

The voltage, in the frequency range of 0.01–1.0 Hz (subject to the length of the cable), to be applied is:

		Test Voltage kV (sinusoidal wave form) (1)		
System voltage	**U0**	New cable	5 years old cable	20 years old cable
22 kV	**12.7**	38 kV peak (27kV RMS)	28 kV peak (20kV RMS)	24 kV peak (17kV RMS)
35kV*	**20.2**	60 kV peak (43kV RMS)	45 kV peak (32kV RMS)	38 kV peak (27kV RMS)

Note *: Values of test voltages are given for 38 kV rated voltage cable and not for 36 kV rated cable that can be encountered on EDC network.
(1) : Values from IEC 60502-2, IEEE 400, IEEE 402-2, and utilities guideline and practices.

The minimum duration of the test is 15 minutes RMS as requested by IEC 60502-2 but where possible it can be extended to 30 minutes even 60 minutes (IEEE 400-2).

The result is acceptable if no breakdown occurs.

Note: *In case a new cable is connected to an existing cable it is strongly recommended to test separately the two cables before installing the junction between them and made a cable diagnosis as here after mentioned.*

6.2.5 Event of necessary cable repairing

In case it is necessary to repair the new underground cable (as for an existing one), after implementation of the straight joints or other accessory only the following tests shall be carried out:

Insulation resistance test

Recording of cable impedance curve

Note: Repetitive VLF testing of a cable should be avoided.

For very strategic underground cables (under river cable, cable supplying hospital, etc..), it could be sometime necessary to carry out a diagnosis of the existing said cables in order to assess their ageing and foreseen their replacement if necessary.

In that case of cable diagnosis, the same process than commissioning of new cable will be carried taking care of the voltages applied to the cables and mentioned above for existing cables. **The VLF test is replaced by a VLF plus Tan δ test.**

Nevertheless, in case of under river/see cables, it will be necessary to contact the manufacturer in order to define jointly the testing voltages to be applied.

When designing maintenance test programs, users should not only take the number of years in service into consideration, but also study the performance history of the cable systems in general such as cable failure records, Mean Time between Failure (MTBF), System Average Interruption Frequency Index (SAIFI), System Average Interruption Duration Index (SAIDI), etc. So in any cases, it is necessary to know if those cables already got many faults that have needed many "DC or AC overvoltage" for finding and locating these faults. In that case, if no cares were taken during fault research the cable insulation could be damaged and the testing voltage should be reduced.

It must be understood that, for different insulation, installations, and cable types, dissipation factor figures of merit can vary significantly from each other. The test works best when comparing present measurements against established historical figures of merit for a particular cable.

So, in case of existing cable diagnosis the following tests may be applied:

6.3 Verification of Insulation characteristics and eventual presence of « water trees »

The VLF test mentioned afore for commissioning of new cable is replaced by a VLF test + Tangent Delta (TD) test that is always an option of VLF equipment. This VLF + TD test is done on each phase.

The tangent-delta is a measure of the dielectric losses of the insulation of the cable which makes it possible to assess its degree of global ageing.

Four measurements will be done:

1. TD at Uo/0.1Hz = 12.7 kV for 22kV cable or 20.2 kV for 35 kV cable during 5 minutes
2. then TD at 15.8 kV (peak) during 5 minutes or 26.1 for 35 kV cable during 5 minutes
3. then TD at 18.9 kV (peak) during 5 minutes or 32.1 for 35 kV cable during 5 minutes
4. Finally TD at 24 kV (peak) for 22 kV cable or 38 kV (peak) for 35 kV cable during 15 minutes

If there is a significant increase in dissipation factor (Tan δ) when increasing the voltage, there is no need to raise the voltage to 2U0, as there is a danger of initiating electrical trees in severely damaged insulation.

It is to be noticed that in order to avoid cable ageing, the testing voltage will stop at 24 kV or 38 kV instead of 25.4 kV and 40.4 kV (2Uo) because it is supposed that all cables in use already got fault research that already damaged that cable.

The duration of each voltage test step is, depending the testing equipment and software set automatically.

Process is as follow but in all cases, refer to the instruction manual of the testing equipment:

1. Connect the VLF + TD equipment to the cable termination lug or testing rod of the separable connectors,
2. Program voltages and times on the VLF/TD testing equipment
3. Start test with automatic measurement of TD for each voltage value.
4. Record the TD curve
5. Repeat for other phases

If it is noted a drastic increase in the value of TD as the voltage increases that indicates a strong ageing or defect of the cable insulation, the test of Partial discharge will be carried out in order to confirm and try to locate the eventual fault that can be most likely a cable termination or joint.

Test result with $2U_0$ and 0.1 Hz:

Tang delta at $2U_0$	Diagnosis	New test after:
Tan $\delta = 1.2 \cdot 10^{-3}$	Good insulation	5 years
$1.2 \cdot 10^{-3} <$ Tan $\delta < 2.2 \cdot 10^{-3}$	Aged insulation	1 year
Tan $\delta = 2.2 \cdot 10^{-3}$	Very degraded insulation	Cable to be replaced

The cable should also be replaced if the tip up (ΔTan δ) between $1U_0$ and $2U_0 > 1.10^{-3}$

<u>Typical Tan δ curves:</u>

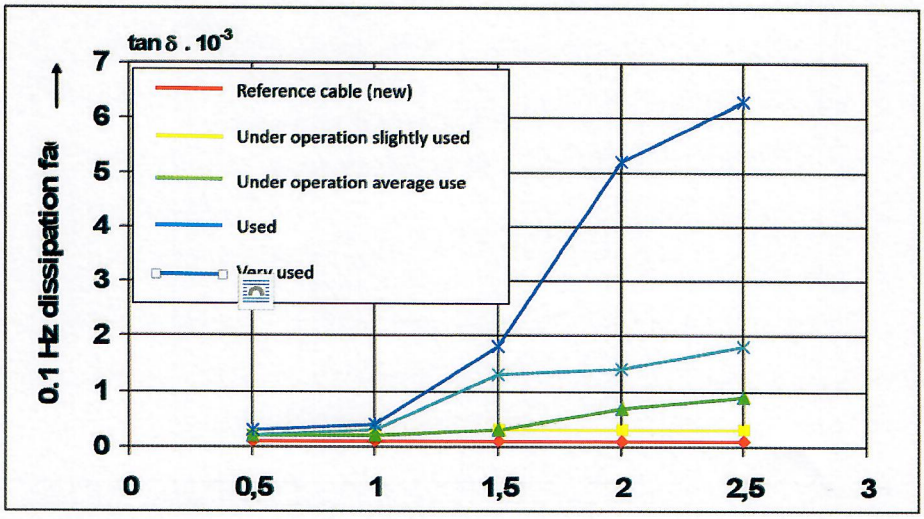

If no drastic increase of TD is noticed, the diagnosis electrical tests are finished.

6.4 Partial discharge (PD) test if necessary when TD is bad

This PD test will confirm the bad Tan δ and locate the origin of the bad insulation and could be tested with different testing equipment. As EDC, VLF plus coupling capacitor is widely used.

Partial discharges are micro-ignitions that occur in cables or in accessories (junctions, cable terminations). They are due to poor workmanship, manufacturing defects or external injuries. Partial

discharges gradually destroy the insulating parts of cables and accessories until a foreseeable breakdown in near or far future.

The detection and localization of partial discharges are extremely important preventive acts which make it possible to decide on and carry out repairs before the occurrence of a breakdown fault.

Two VLF (+coupling capacitor) + PD tests will be done;

- 12.7 kV for 22 kV cable and 20.2 kV for 35 kV cable
- 16 kV for 22 kV cable and 26 kV for 35 kV cables with exception if the software allow other voltages but in any case less than 18 kV for 22 kV cable and less than 32 kV for 35 kV cable.

The process is as follow:

1. Connect the VLF, capacitor and PD equipment to the cable termination or testing rod of the separable connector
2. Program voltages on the VLF testing equipment
3. Start test with automatic measurement of PD from the computer.
4. Record the PD curve and value with distance of PD from the cable origin.
5. Repeat for other phases if necessary (this depends of the TD measurements)

Example of PD on a 3km length cable (screen of computer)

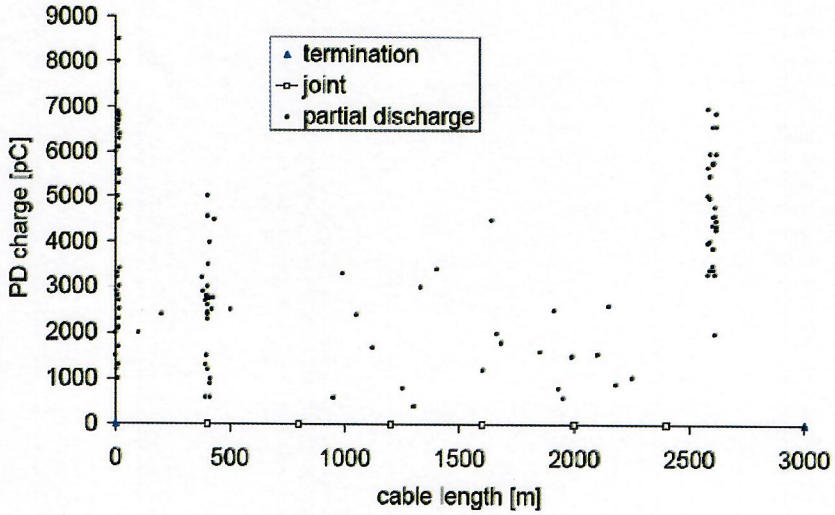

In that case, we can see that one joint got PD at about 400 m from the cable origin as well as another defect in "full cable" (electric or water tree) at about 2600 m from the cable origin.

Bibliography:

IEC 60502-2	: Power cables with extruded insulation and their accessories for rated voltages from 1 kV (Um = 1,2 kV) up to 30 kV (Um = 36 kV) – Part 2: Cables for rated voltages from 6 kV (Um = 7,2 kV) up to 30 kV (Um = 36 kV)
IEEE 400	: IEEE Guide for Field Testing and Evaluation of the Insulation of Shielded Power Cable Systems Rated 5 kV and Above
IEEE 400-2	: IEEE Guide for Field Testing of Shielded Power Cable Systems Using Very Low Frequency (VLF) (less than 1 Hz)
IEEE PCIC-2007-30	: Medium voltage cable predictive diagnostics technique.
IEEE 10736306	: Characterization of Ageing for MV Power Cables Using Low Frequency Tan δ Diagnostic Measurements
IEEE 17320319	: Best practices for offline diagnosis of MV cables
IEEE 18203326	: Partial discharge tracking on cross-linked polyethylene MV and HV cables
WESTERN POWER	: Distribution commissioning manual
NEXANS	: Diagnostics sur câbles
OLEX (Nexans cable)	: Recommendations for test of underground cable after installation
PRYSMIAN	: On site testing guidelines for MV cables
AUSGRID	: NS161 Specification for testing underground cables
HORIZON POWER	: Testing of high voltage cables manual
ERGON ENERGY	: Commissioning tests for HV underground cables (up to 33kV)
UK POWER NETWORK	: HV insulation testing
ESSENTIAL ENERGY	: Testing and commissioning procedure Sub transmission underground cables
ENEDIS	: Tests et diagnostics de câbles souterrains
BAUR	: Cable testing and diagnosis
MEGGER	: All user guides and leaflets about Resistance testers and VLF equipment